NIBCO
AHEAD OF THE FLOW™

DUCTILE IRON RESILIENT WEDGE GATE VALVES

609-RW SERIES

607-RW SERIES

APPLICATIONS

- NRS and OS&Y RW gate valve for fire protection and water systems
- Valves are designed for bubble tight service
- 250 PSI CWP, 160°F maximum

MATERIALS & CONSTRUCTION

- DI body with bronze stem
- Rubber encapsulated DI wedge
- Specially designed NRS Post Indicator Gate Valve that allows simple removal of Post Indicator Flange to convert valve to standard NRS AWWA gate valve
- Rubber bonnet gasket for longevity and protection of bonnet bolts
- Unique valve design with sealed countersunk bolts providing no exposure of bonnet bolts
- OS&Y body drilled, tapped and plugged @ boss location "A"
- OS&Y gate has pre-grooved stem for supervisory switch
- Low-torque operation
- Full diameter waterway

DESIGN CRITERIA

- UL/ULC Listed
- FMRC Approved
- Valves meet or exceed AWWA C-509 & 515
- Fusion-bonded epoxy inside and out meets or exceeds AWWA C-550



F-607-RW



F-609-RW



M-609-RW

250 lb. WWP Iron Body Gate Valves

Fire Protection Valve • Outside Screw and Yoke • **Resilient Wedge** • Epoxy Coated Interior/Exterior • Pre-Grooved Stem for Supervisory Switch • Drilled, Tapped and Plugged at Boss Location A**

250 PSI/17.2 Bar Non-Shock Cold Working Pressure (160º F/71º C max. operating temperature)

UL/ULC LISTED • FMRC APPROVED •
AWWA C509 & 515 • M.E.A. APPROVED



F-607-RW
Flanged

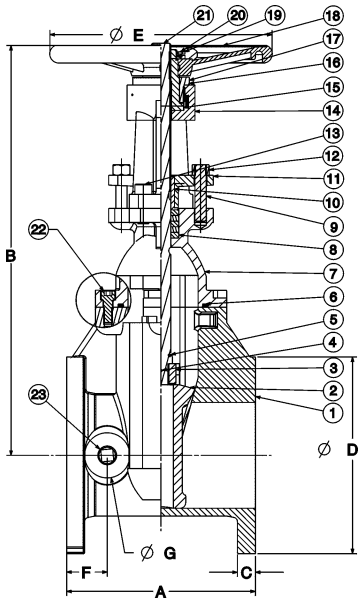

F-607-RW
Flg x Flg

MATERIAL LIST

	PART	SPECIFICATION
1.	Valve Body	Ductile Iron ASTM A 536
2.	Resilient Wedge	Ductile Iron ASTM A 536/EPDM ASTM D 2000
3.	Wedge Nut	Bronze ASTM B 584 UNS C83600
4.	Dowel Pin	Stainless Steel ASTM A 276 UNS S42000
5.	Stem Back Seat O-Ring	EPDM ASTM D 2000
6.	Bonnet Gasket	EPDM ASTM D 2000
7.	Bonnet	Ductile Iron ASTM A 536
8.	Stem Packing	EPDM ASTM D 2000
9.	Threaded Rod	Carbon Steel Zinc Plated
10.	Gland Bushing	Bronze ASTM B 584
11.	Gland	Cast Iron ASTM A 126-B
12.	Gland Nut	Stainless Steel 18-8
13.	Yoke Screw	Alloy Steel ASTM A 574M Zinc Plated
14.	Yoke	Cast Iron ASTM A 126-B
15.	Yoke Bushing	Bronze ASTM B 584
16.	Flat Point Set Screw	Alloy Steel ASTM F 912M Black Oxide
17.	Yoke Bushing Retainer	Cast Iron ASTM A 126-B
18.	Handwheel	Ductile Iron ASTM A 536
19.	Handwheel Nut	Carbon Steel Zinc Plated
20.	Flat Head Screw	Carbon Steel Zinc Plated
21.	Stem	Bronze ASTM B 150 UNS C61400
22.	Bonnet Screw	Alloy Steel ASTM A 574M Zinc Plated
23.	NPT Pipe Plug	Malleable Iron ANSI B16.3 (Epoxy Coated)
24.	UL/FM Label (not shown)	Aluminum

*** Electrostatically applied fusion-bonded epoxy coated inside and outside per AWWA C-550.**

****Drilled, tapped and plugged at Position A with ½" valve sizes 2½"–4", ¾" on 6"–8", 1" on 10"–12".**

DIMENSIONS—WEIGHTS—QUANTITIES

Size		Dimensions																Bolt Circle		Flange	Turns	Weight	
		A		B Open		B Closed		C		D		E		F		G				Holes	To Open	Lbs.	Kg.
In.	mm.	In.	mm.	In.	mm.	In.	mm.	In.	mm.	In.	mm.	In.	mm.	In.	mm.	In.	mm.	In.	mm.				
2½	65	7.5	190	17.8	453	14.9	378	0.69	17.5	7.0	178	7.9	200	1.50	38	1.6	40	5.50	140	4	8.8	45	20
3	80	8.0	203	19.7	500	15.9	405	0.75	19.0	7.5	191	7.9	200	1.73	44	2.1	54	6.00	152	4	10.5	53	24
4	100	9.0	229	21.0	534	16.6	422	0.94	24.0	9.0	229	10.2	260	2.13	54	2.1	54	7.50	191	8	10.4	94	43
6	150	10.5	267	29.3	744	22.9	581	1.00	25.4	11.0	279	12.4	315	2.24	57	2.5	64	9.50	241	8	15.7	154	70
8	200	11.5	292	37.0	939	28.5	724	1.13	28.6	13.5	343	14.8	375	2.48	63	2.8	70	11.75	298	8	17.2	247	112
10	250	13.0	330	44.8	1139	34.5	877	1.19	30.2	16.0	406	16.4	416	2.56	65	2.8	70	14.25	362	12	21.4	349	159
12	300	14.0	356	52.2	1326	39.9	1014	1.25	31.8	19.0	483	17.5	445	2.91	74	3.4	86	17.00	432	12	25.5	484	220

FREEZING WEATHER PRECAUTION: Subsequent to testing a piping system, valves should be left in an open position to allow complete drainage.

NIBCO INC. WORLD HEADQUARTERS • 1516 MIDDLEBURY ST. • ELKHART, IN 46516-4740 • USA • PH: 1.800.234.0227
TECH SERVICES PH: 1.888.446.4226 • FAX: 1.800.234.0557 • INTERNATIONAL OFFICE PH: +1.574.295.3221 • FAX: +1.574.295.3455
www.nibco.com